FRONT & SIDE VIEW

MODEL DL1800A

1800lb/817kg CAPACITY
PULLING WINCH

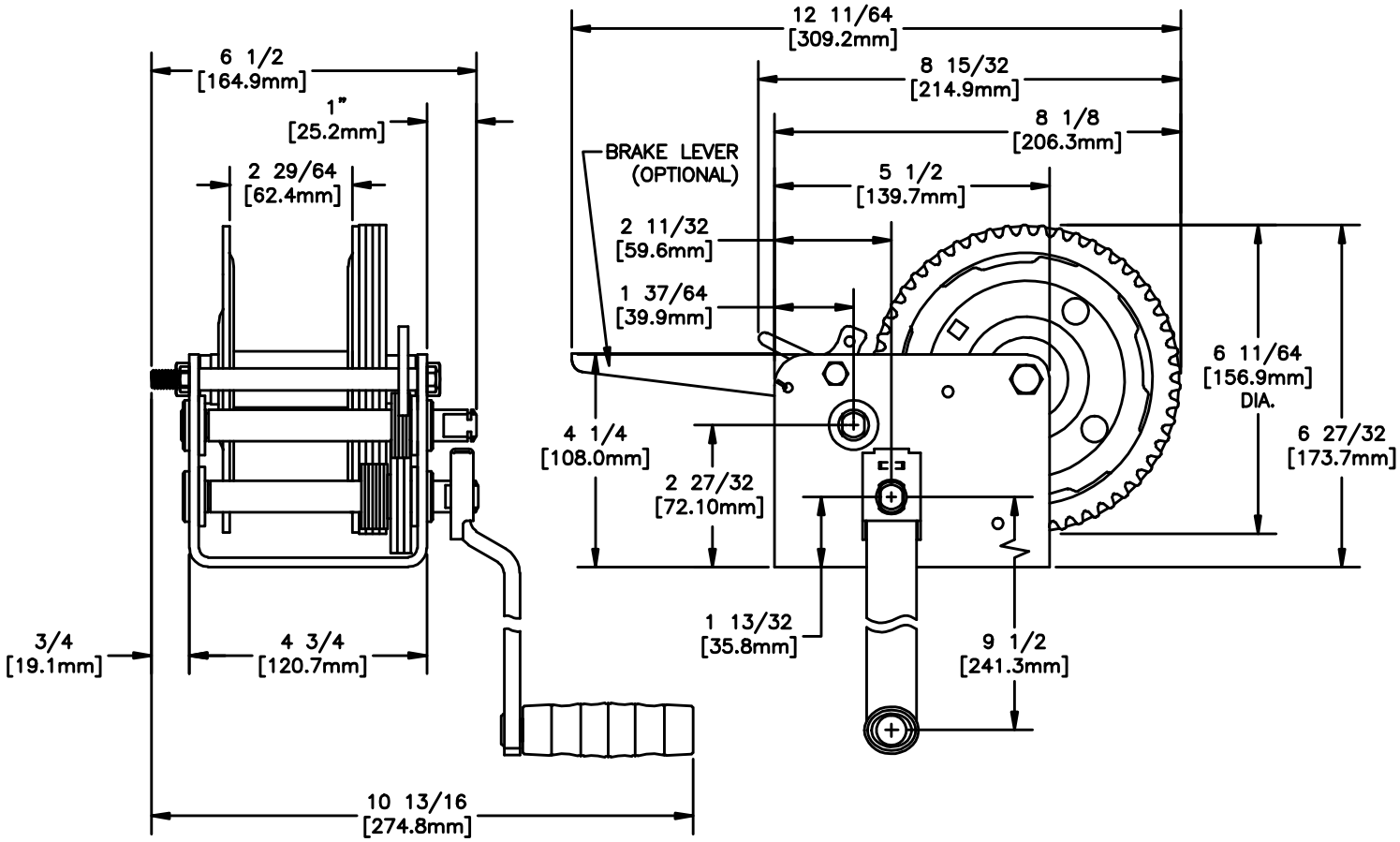
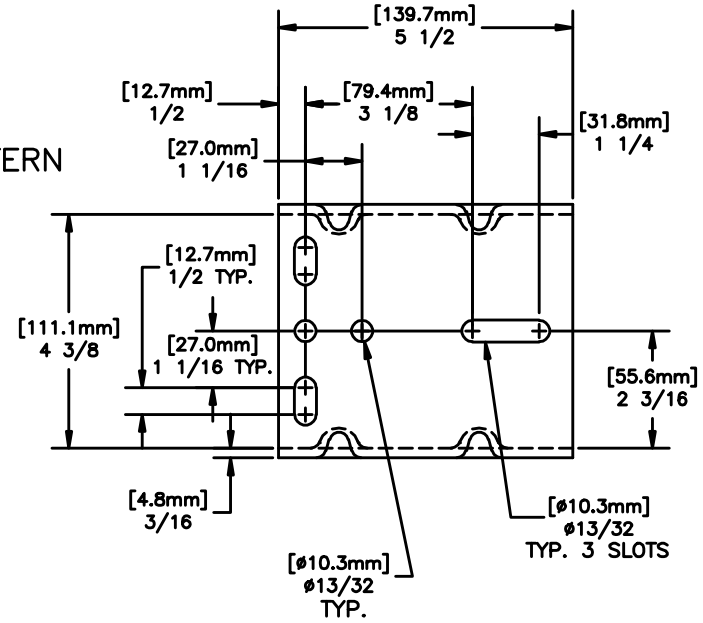
BASE HOLE PATTERN